PELLUM sauna stove model “P47” (6-16m³)

Contents

About sauna stoves that operate with pellets 2
PELLUM stove (6-16 m^3) GENERAL INFO 5
INSTALLATION AND USER MANUAL 5
INSTALLATION 6
Connecting the stove to the flue pipe..... 9
USER MANUAL 10
Commissioning 10
Heating process..... 11
Maintenance..... 13
WARRANTY 13

About sauna stove that operates with pellets

Sauna stove that operates with pellets is user-friendly and requires minimal maintenance. Pellets are easy to add manually, and cleaning the sauna stove is simple, as there is less ash and residue compared to traditional wood-burning stoves.

Heating with pellets is eco-friendly because they are renewable and do not add extra carbon to the atmosphere. This helps to reduce greenhouse gas emissions and supports sustainable development.

NB! There are no CE requirements for pellet-fueled sauna stoves. The fire safety requirements of the local market must be followed.

The Pellum sauna stove's lab measurements are 8 times lower than German 2.Bimschv standards for wood-burning stoves and 50% lower than the pollution limits for pellet stoves.

	ppm	mg/Nm³	mg/Nm³, O_2 = 13%
NO	57.5	77.1	81.6
NO_2[1]	< 0.4	-	-
NO_X	57.5	117.9	124.8
CO	118.3	147.9	156.5

Saasteaine	mg/Nm³	mg/Nm³, O_2 = 13%
PMsum	14.6	15.4

Saasteaine	mg/Nm³	mg/Nm³, O_2 = 13%
TVOC	6.5	6.9

Toimivusdeklaratsioon

Pellum pelletkeris mudel “P47”

Harmoniseeritud standard: ELAMUTE TAHKEKÜTTESEADMED. OSA 2-6: MEHAANILISELT PUITGRAANULITEGA TÖÖTAVAD TOASOOJENDID, SISSEEHITATUD SEADMED JA PLIIDID	CE EN 16510-2-6:2023
Vastab nõuetele:	Ecodesign Regulations Commission Regulation (EU) 2015/1185
	BImSchV Stufe 2 DIN EN 14785
Ohutuskaugused süttivatest materjalidest:	
Eest:	500mm
Külgedelt:	120mm
Tagant (alates kambrist):	20mm
Pealt:	900mm
Tuleohutus:	Nõuetele vastav
Suitsutoru diameeter ja korstna klass:	Ø115mm / T600
Ohtlike ainete eraldumine:	NPD
Põlevate ainete emissioon:	Läbitud
Mehaaniline vastupidavus:	Läbitud
Pinna temperatuur:	Läbitud
Puhastatavus:	Läbitud
Üldine võimsus:	15,7kW
Kasutegur:	88%
Suitsugaaside temperatuur:	380˚C / max 480˚C
CO (13% O_2)	156,5 mg/m³
PM (13% O_2)	15,4 mg/m³
NOx(13% O_2)	124,8 mg/m³
OGC (13% O_2)	6,9 mg/m³
Lõõri tõmme:	12Pa
Hoiustamiskamber:	15kg (võimalik lisada juurde)
Tootja:	OÜ AW Metall Aruküla tee 7 Tartu, Eesti

PELLUM stove (6-16 m^3) GENERAL INFO

- Read the installation and user manuals carefully!
- Keep the manual for future use.

The PELLUM stove is designed to provide dry or humid steam in the sauna.

- Stove weight 95 kg
- Weight of stones: 120-140kg (not included in the set)
- Minimum cross-section of ventilation openings 78.5 cm^2
- Sauna steam room size range 6m^3 - 16m^3
- Minimum cross-section of the chimney flue 102 cm^2

INSTALLATION AND USER MANUAL

ATTENTION! The stove described in this manual may only be connected to the chimney by a qualified specialist. The PELLUM stove set includes:

- stove with necessary contents
- stove installation and user manual
- pellet chamber with lid
- glass door
- ash drawer
- Stone grid with front and rear panel

Note! The stove set does not include stove stones or chimney pipes from the stove to the chimney! These can be purchased from stove dealers.

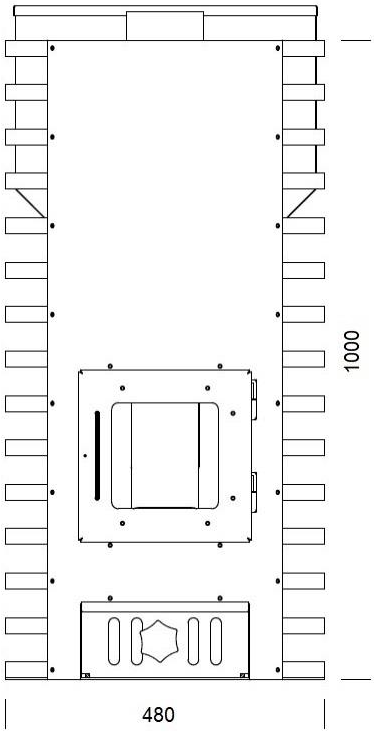

Figure 1: Front view

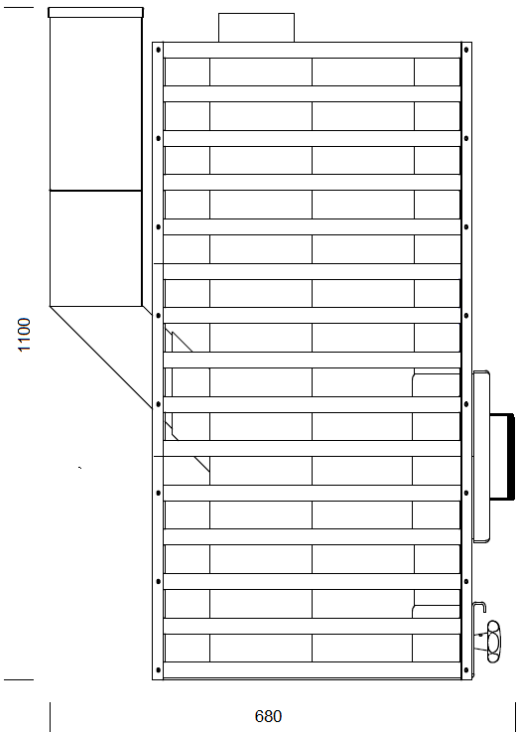

Figure 2: Side view

INSTALLATION

- When installing the stove, all local normative documents must be followed, including those related to the applicable national and European Union standards for installation, such as EN 15821:2010. Safety distances for combustible materials are as follows: 120mm to the sides, 20mm to the rear (measured from the pellet chamber), 500mm in front, and 1000mm above the stove. When following the safety guidelines, it is important to lay the stove stones in such a way that the metal surface of the stove does not radiate heat directly the combustible surface.

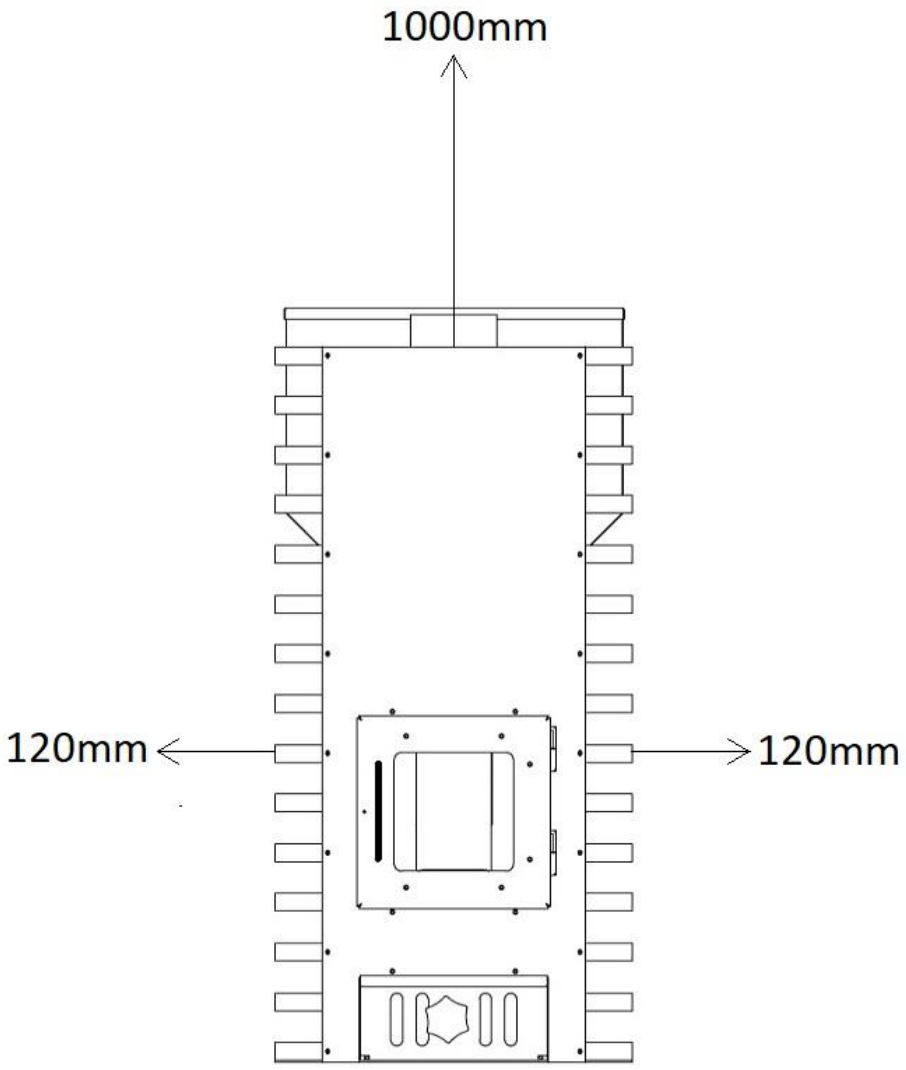
1000mm
120mm
120mm

- If the stove is installed in a niche made of non-combustible material (stone, concrete), it should be ensured that there is at least 50 mm of air movement between the wall and the stove.
- The safety distance from combustible materials can be reduced to half when using a single heat shield and to a quarter when using a double heat shield. The heat shield must have at least a 30 mm gap between its outer surface and the protected surface.
- The heater must be installed on a base made of non-combustible material (min. 50 mm) with the necessary load-bearing capacity, which can also be the surface of the floor itself if suitable.
- There should not be no electrical devices or wires in the safety area of the heater.

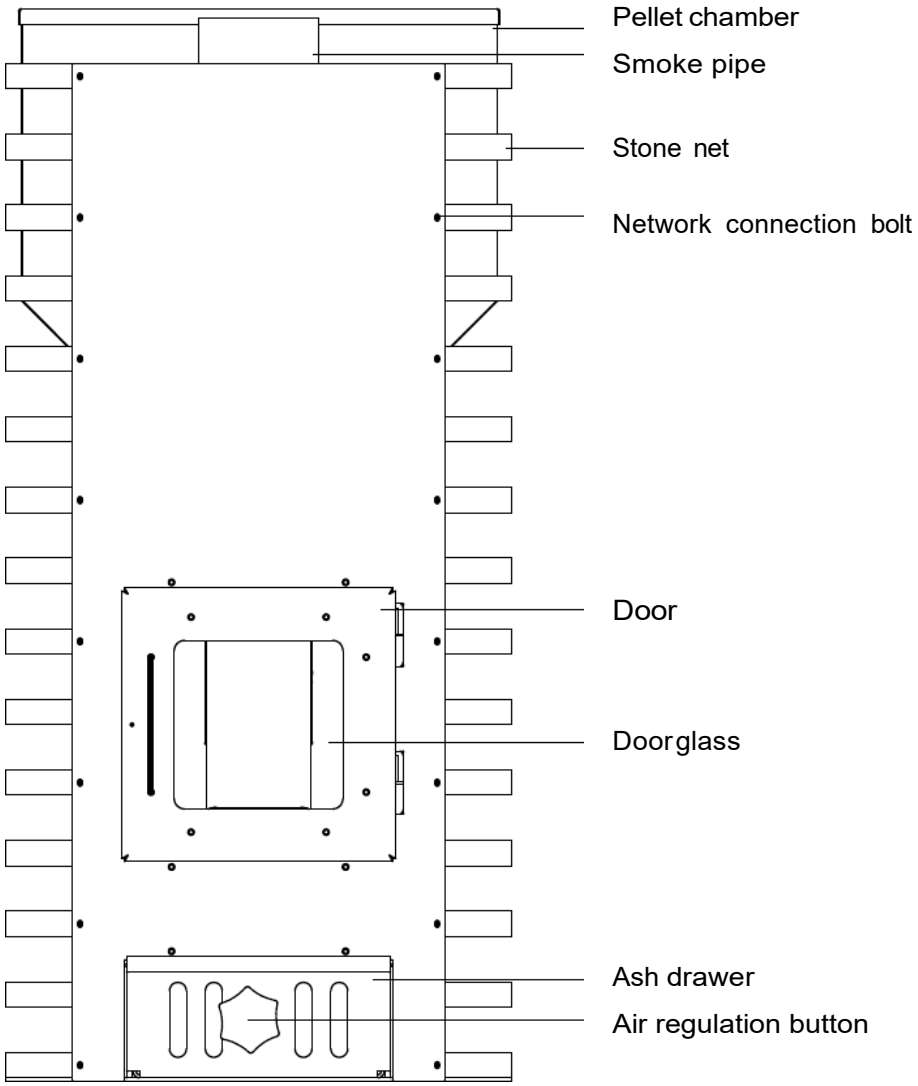

Connecting the stove to the flue pipe

- The PELLUM stove has a flue gas outlet on top of the stove. Special metal smoke pipes with an internal diameter of 115mm are used to connect the stove to the flue, which are sealed with heat-resistant sealing cord if necessary.
- The elbows of the connecting pipes must have a smooth curve to minimize draft resistance.
- The fire class of the connecting pipes and chimney must comply with the T600 marking
- The pipe is passed through the chimney wall and sealed with stone wool.
- The connection of the stove to the flue pipe can only be made by a qualified specialist.

- The stove's flue gases must be directed to a separate flue pipe; using the flue pipe used by another heating appliance is not allowed! NB! The use of forced ventilation for exhaust can cause air exchange problems in the room and insufficient combustion air for the fire, which is why the design and construction of such a ventilation system is only permitted under the responsibility of a specialist with the appropriate license.

USER MANUAL

Commissioning

- When connecting the pellet chamber, ensure that the chamber is fully positioned. Connect the pellet chamber after stacking the stones!

WARNING! An incorrectly positioned pellet chamber can cause improper air movement and hinder the uniform flow of pellets into the combustion chamber! Improper air movement can lead to carbon monoxide poisoning!

- The stones suitable for the stove are specifically stove stones sold in stores. Using ceramic stones shortens the lifespan of the stove.
- Before stacking the stones, we recommend washing them with fresh water.
- Weight of stones for the sauna stove: ~120kg (not included in the set)
- Remove the bolts from the stone grid with the key included in the set along with the grid parts.

NB! When disconnecting, leave the lower grids on both sides. Then stack the stones on the sides of the stove one layer at a time, evenly from all sides so that there is no direct heat radiation from the metal surface to combustible materials. Once the layers are stacked, continue securing the grids and repeat the same process until the topmost grids are secured, and it is advisable to stack 8-10cm of stones as the top layer of the stove.

Heating process

- Ensure the ash drawer is properly positioned and both the drawer and combustion chamber are free of ash before filling the pellet chamber.
- Ensure that the door of the firebox closes according to the instructions and that there are no defects in the door! Also, make sure that the door glass is intact!
- Pour the pellets into the pellet chamber and place the lid on the pellet chamber the right way up. The pellet chamber can hold 15kg of pellets at once (one standard-sized bag). The pellets automatically fall through the chute into the combustion chamber.

NB! Use only 6mm ENplus A1 certified pellets for heating. This ensures the most efficient heating of the stove and maximizes its lifespan. Pellets without the appropriate certification can produce excessive ash and other residues, significantly shortening the stove's lifespan, affecting the combustion process, and potentially carrying dangerous pollutants into the external environment through flue gases.

- Open the combustion chamber door. Use only the following to ignite pellets in the combustion chamber:

1) ignition cubes, placing the burning cubes (about 4 pieces in a circle) on the pellets or

2) ignition gel, adding it to the pellets from the top before igniting and then ignite.

- After ignition, close the door properly. To start the combustion process faster, we recommend using ignition gel.

WARNING! Do not use flammable liquids and/or explosive substances such as gasoline for ignition! This may pose a fire hazard and/or risk of self-injury!

- Keep the stove door closed while heating. An open door lets in air, cools combustion gases, and delays heating stones. It also risks smoke gases entering rooms, posing carbon monoxide poisoning hazards.

WARNING! An open stove door during heating may cause smoke gases to enter the pellet chamber and from there to the steam room, depending on the location of the ventilation openings in the room, leading to a risk of carbon monoxide poisoning!

Due to the location of the ventilation openings, smoke gases may enter the pellet chamber and from there to the steam room, creating a risk of carbon monoxide poisoning!

- The combustion air is regulated using the damper on the front panel of the ash drawer. After ignition, keep the damper open up to 50% for up to 10 minutes to ensure more intense combustion with sufficient air inflow. Then, the damper can be opened 100% for up to 30 minutes until the full combustion phase has started. After that, we recommend keeping the damper open about 50-75% depending on the chimney draft. To achieve the desired temperature in the steam room, the damper opening should be reduced to about 30% approximately 5-10˚C before reaching the desired temperature, depending on the volume of the steam room, as the heating stones are already hot and continue to raise the temperature in the steam room. If the desired temperature in the steam room is not achieved, increase the damper opening.

- Avoid pouring water onto the hot door glass. The warranty does not cover tempered door glasses. Door glasses can be replaced. The dimensions of the glass are 190x190x4mm.

WARNING! Heating with a broken door glass is prohibited, as it may cause smoke gases to move through the pellet chamber or the opening to the steam room, leading to a risk of carbon monoxide poisoning!

- The steam room heating time depends on wall insulation, window size, glass door presence, room volume, and air damper openness.
- The heating stones and metal surfaces are hot during heating and can cause burns upon contact with the body. Adjust the air inflow damper only with heat-resistant gloves. We recommend keeping the gloves in a handy place, but not in a permanently hot environment.
- Do not throw salty water onto the sauna stove!
- It is not advisable to throw rough water with excessive iron content onto the sauna stove.
- One chamber full of pellets (15kg) lasts for the sauna heating process along with sauna bathing for 3-4.5 hours. This depends on the size of the steam room and the desired temperature in the steam room. The manufacturer's recommendation is to stay on the bench at a temperature of 75-85˚C, which provides the most pleasant steam at a sufficient temperature. The temperature in the steam room is measured 25- 30cm below the ceiling, which should also be the average person's according to height at the level of his head. The desired temperature is achieved about 1-2 hours after ignition, depending on the parameters of the steam room.

Maintenance

- Before each use, empty the ash drawer and clean the bottom of the combustion chamber.
- Clean the stove flue pipes and chimney at least once a year. With more frequent heating, about every 50 uses. For this, use the requirements arising from the law in the country of location and/or a specialist.
- Before each use, ensure that the stove door closes properly and that the door glass is not broken. Also, check that the pellet chamber is placed correctly in its slot.
- Due to large temperature fluctuations over time, the stones in the sauna stove crumble and lose their necessary properties. We recommend replacing the stove stones approximately after 50-100 uses, depending on the intensity of heating. The replacement process is like the initial installation, where the stones and mesh parts must be removed in the correct order to avoid the risk of injury.
- When cleaning the sauna stove, all local normative documents must be followed, which set out the fire safety requirements for cleaning heating appliances (in Estonia: RTL 1998,195/196, 771 and RTL2000,99,1555).

WARRANTY

The manufacturer's warranty for sauna stoves is valid for private individuals 24 months from the date of purchase based on the receipt. The warranty covers defects due to manufacturing faults. The warranty does not cover issues arising from the use of the sauna stove due to temperature and/or steam water interaction:

- metal deformation;
- surface coating;
- door glass.